NEMA标准超高效三相异步电动机

NEMA GENERAL PURPOSE PREMIUM EFFICIENCY THREE-PHASE INDUCTION MOTORS

产品介绍 & BRIEF INTRODUCTION

该系列产品按照美国NEMA标准和加拿大C390标准设计和制造,款式新颖,制造精良,安全可靠。该系列产品具有超高效率,起动转矩大,噪音低,振动小,温升低,运行可靠等特点。

This series of products are designed and manufactured according to NEMA standard and C390 standard of Canada, They are novel in style, excellent in manufacture, safe and reliable. This series of products have the characteristics of high efficiency, large starting torque, low noise, small vibration, low temperature rise, reliable in operation, etc.

■ 特征

- 全封闭自扇冷却TEFC
- 防护等级 IP55
- 三相，60Hz，230/460V，460V或575V；
- 1.15使用系数；
- NEMA B设计，或NEMA A设计；
- F级绝缘，B级温升；
  环氧树脂VPI 浸渍处理；
- 超大的接线盒可90度旋转，可F1、F2安装方式转换
- 环境温度-15--40°C，海拔不超过3300英尺；
- 电机均可双向旋转；默认的转向从尾端看为顺时针；
- 铸铁结构件；
- 鼠笼铸铝转子；
- 140T-210T为封闭式轴承
- 250T及以上机座轴承为开启式轴承，并配有注油系统
- 接地端子及螺钉在接线盒内
- 230/460V 140T-250T 9根引接线
  280T-440T 12根引接线449-587为6根引接线
- 575V 140T-180T 3根引接线
  210T-587T 6根引接线

FEATURES

- Totally Enclosed Fan Cooled(TEFC)
- Protection IP55
- 3 Phase,60Hz,230/460V ,460V or 575V Ratings Available
- 1.15 Service Factor
- NEAM Design B or NEMA Design A
- Class B Temperature Rise, Class F Insulation
- Vacuum Pressure Impregnation of epoxy resin varnish
- Oversized Main Conduit Box Rotatable in 90 Degree, F1，F2 Convertible
- Designed for -15-40℃ Ambient Temperature and Altitude Lower than3300 ft
- Bi-Directional Rotation and CCW View From NDE When Not Specified
- Cast Iron Construction
- Aluminum Die Cast Squirrel Cage Rotor Construction
- Sealed and Unregrease Bearings on Frame140T-210T
- Regreaseable Bearings for 250 Frame and above.
- Grounding Terminal Inside Main Box
- 230/460V 9 Leads for140T-250T，12 Leads for280T-440T，6 Leads for 449T-587T
- 575V 3 Leads for 140T-180T，6 Leads for 210T-587T

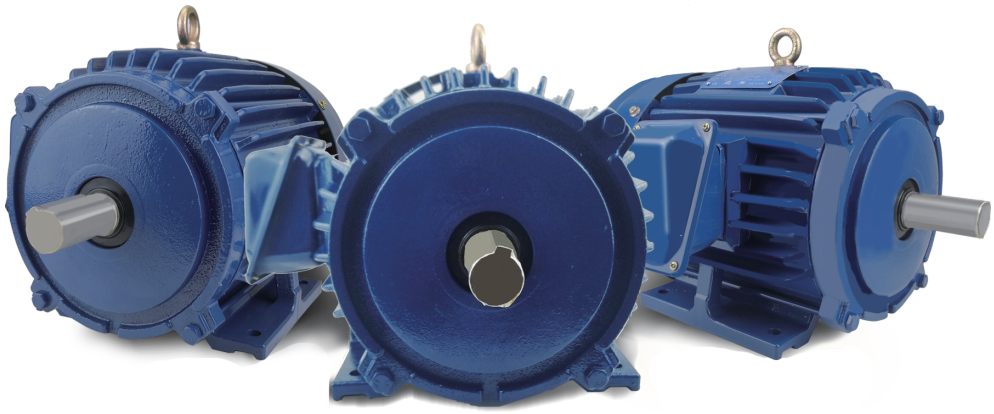

安装形式

T型—有底脚的普通安装结构型式
TC型—有底脚或无底脚，C型平面安装的结构型式，电动机的安装方式符合MG1-4.3标准规定，安装代号符合下表：

T type-common mounted motor with feet

MOUNTING TYPE

T type-common mounted motor with feet.
TC type-The motor with or without feet, The mounting method of C type, The mounting method of motor should conform to MG1-4.3. Assembly symbols shall be as follows:

地面安装 Floor mountings	墙上安装 Wall mountings				顶面安装 Ceiling mountings
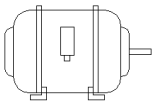 F-1	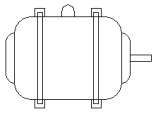 W-1	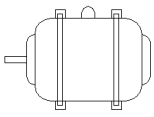 W-2	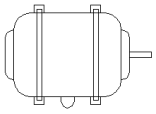 W-3	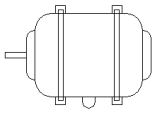 W-4	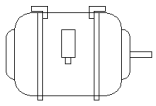 C-1
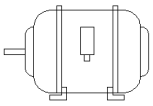 F-2	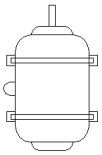 W-5	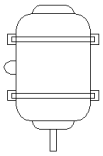 W-6	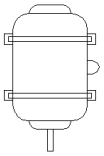 W-7	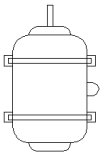 W-8	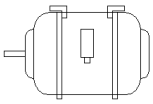 C-2

注：安装代号F-1,W-2，W-3，W-6，W-8，C-2表示接线盒与安装底脚及轴伸在同样对应的位置。

Note:Assembly symbols F-1,W-2,W-6,W-8 and C-2 show the same relative location for the terminal box,the mounting feet and the shaft-extension.

订货须知

1. 本样本所提供的数据仅供用户参考，具体数据允许有变动，订货前请惠予联系。
2. 订货时请注明所需电动机产品型号、功率、同步转速、电压、频率和安装结构形式等。

INSTRUCTIONS TO BUYERS

1.The technical data given in this catalogue are for reference only and subject to alterations.Before ordering, please contact us.
2.The following specifications are provided for the order: motor type,output,synchronous speed, voltage, frequency and mounting arrangement etc.

公司资质

质量体系认证证书 (ISO9001)
Certificate of Quality Systerm Certification (ISO9001)

CSA证书（加拿大标准协会认证的安全和效率认证）
CSA Certification (Savety & Efficiency Certification by CSA)

COMPANY'S APTITUDE

CC证书(美国能源部签署的效率证书)
CC Certification(Efficiency Certification by US DOE

UL认证
Certificate of UL

接线盒

接线盒位于机座中间。电动机具有3、6、9、12根引出线，下图是接线方法。引接线长度从伸出机座起不小于6英寸，线端标志及接线图按MG1-2.62的规定，接线盒内有接地标志及螺钉。Y型和△型联接的双电压、单电压电机的接线标志。

TERMINAL BOX

The following diagrams indicate the ways of connection. The length of lead is not less than 6 inches measured from frame surface. Terminal marking and connections should accord with MG1-2.62.
There is grounding screw with grounding marking in the terminal box. Terminal marking for Y and △ connected Dual-voltage and Single-voltage motors.The terminal box is generally located in the middle of the frame. There are 3，6，9 and 12 lead wires.

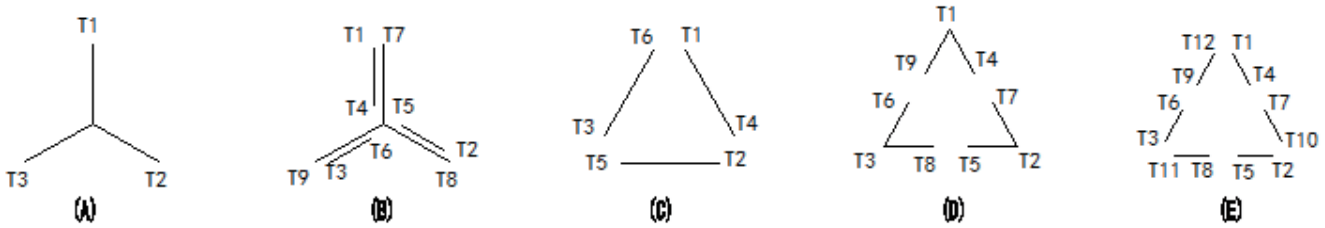

电压 Voltage / 机座号 Frame	230V/460V				460V		575V	
	230V		460V					
	L1，L2，L3	联结在一起 Tie together	L1，L2，L3	联结在一起 Tie together	L1，L2，L3	联结在一起 Tie together	L1，L2，L3	联结在一起 Tie together
143T-184T 213T-215T (6P)	（T1，T7） (T2，T8) (T3，T9) (B)	(T4，T5，T6)	T1，T2， T3 (B)	(T4，T7) (T5，T8) (T6，T9)	—		T1，T2， T3 (A)	—
213T-215T (2，4P) 254T-256T	T1，T2，T3 (D)	(T1，T6，T7) (T2，T4，T8) (T3，T5，T9)	T1，T2， T3 (D)	(T4，T7) (T5，T8) (T6，T9)	T1，T2， T3 (C)	(T1,T6) (T2,T4) (T3,T5)	T1，T2， T3 (C)	(T1,T6) (T2,T4) (T3,T5)
284T TS- 286T TS 324T TS- 365T TS 404T TS- 447T TS	T1，T2，T3 (E)	(T1,T6,T7,T12) (T2,T4,T8,T10) (T3,T5,T9,T11)	T1，T2， T3 (E)	(T4,T7)(T5,T8) (T6,T9)(T1,T12) (T2,T10)(T3,T11)				
449T-587T	—		—					

NEMA标准超高效三相异步电动机

技术数据 TECHNICAL DATA

机座号 Frame No.	额定功率 Rated Output		满载时 At Full Load						效率 Efficiency	堵转电流 Locked rotor current	转矩 Torque		噪声 Noise Level
			转速 Speed	230/460V		575V		功率因数 Power factor			堵转/额定 Locked / Rated	最大/额定 Breakdown / Rated	
	HP	kW	r/min	电流 Current A	接法 Connection method	电流 Current A	接法 Connection method	Cosφ	FL 100%	A(460V)	%	%	Lw dB(A)
143T	1	0.75	3475	2.9/1.45	2Y/Y	1.16	Y	0.84	77	15	175	250	70
143T	1.5	1.1	3500	4.1/2.05	2Y/Y	1.64	Y	0.81	84	20	200	270	70
145T	2	1.5	3500	5.2/2.6	2Y/Y	2.08	Y	0.84	85.5	25	200	260	70
182T	3	2.2	3500	7.4/3.7	2Y/Y	2.96	Y	0.87	86.5	32	200	280	75
184T	5	3.7	3500	11.9/5.95	2Y/Y	4.76	Y	0.89	88.5	46	190	280	75
213T	7.5	5.5	3500	17.1/8.57	2Δ/Δ	6.86	Δ	0.9	89.5	63.5	140	250	77
215T	10	7.5	3500	23.2/11.6	2Δ/Δ	9.28	Δ	0.9	90.2	81	150	250	77
254T	15	11	3500	34.5/17.2	2Δ/Δ	13.8	Δ	0.88	91	116	170	240	87
256T	20	15	3500	46.5/23.2	2Δ/Δ	18.6	Δ	0.89	91	145	150	210	88
284TS	25	18.5	3500	57.5/28.8	2Δ/Δ	23	Δ	0.88	91.7	182.5	140	220	88
286TS	30	22	3500	68.4/34.2	2Δ/Δ	27.4	Δ	0.88	91.7	217.5	140	220	88
324TS	40	30	3500	92.6/46.3	2Δ/Δ	37	Δ	0.88	92.4	290	150	230	90
326TS	50	37	3500	113/56.7	2Δ/Δ	45.4	Δ	0.88	93	362.5	150	230	90
364TS	60	45	3500	137/68.6	2Δ/Δ	54.9	Δ	0.88	93.6	435	150	210	91
365TS	75	55	3500	168/83.8	2Δ/Δ	67	Δ	0.88	93.6	542.5	140	210	91
405TS	100	75	3500	225/112	2Δ/Δ	89.9	Δ	0.89	94.1	725	150	250	94
444TS	125	90	3500	264/132	2Δ/Δ	106	Δ	0.9	95	907.5	130	230	97
445TS	150	110	3500	323/161	2Δ/Δ	129	Δ	0.9	95	1085	140	230	97
447TS	200	150	3500	434/217	2Δ/Δ	173	Δ	0.91	95.4	1450	140	230	99
449TS	250	185	3500	544/272	2Δ/Δ	217	Δ	0.9	95.8	1825	140	200	107
449TS	300	220	3500	652/326	2Δ/Δ	261	Δ	0.9	95.8	2200	140	200	110

NEMA标准超高效三相异步电动机

技术数据 TECHNICAL DATA

机座号 Frame No.	额定功率 Rated Output		满载时 At Full Load						效率 Efficiency	堵转电流 Locked rotor current	转矩 Torque		噪声 Noise Level
			转速 Speed	230/460V		575V		功率因数 Power factor			堵转/额定 Locked / Rated	最大/额定 Breakdown / Rated	
	HP	kW	r/min	电流 Current A	接法 Connection method	电流 Current A	接法 Connection method	Cosφ	FL 100%	A(460V)	%	%	Lw dB(A)
143T	1	0.75	1760	3.2/1.6	2Y/Y	1.3	Y	0.68	85.5	15	275	300	65
145T	1.5	1.1	1755	4.6/2.3	2Y/Y	1.84	Y	0.71	86.5	20	275	300	66
145T	2	1.5	1755	5.8/2.9	2Y/Y	2.32	Y	0.74	86.5	25	250	300	66
182T	3	2.2	1760	8.0/4.0	2Y/Y	3.2	Y	0.77	89.5	32	215	250	68
184T	5	3.7	1755	13/6.5	2Y/Y	5.2	Y	0.8	89.5	46	215	250	68
213T	7.5	5.5	1770	18.6/9.29	2Δ/Δ	7.44	Δ	0.81	91.7	63.5	180	250	70
215T	10	7.5	1770	24.7/12.4	2Δ/Δ	9.9	Δ	0.83	91.7	81	180	230	70
254T	15	11	1780	36.4/18.2	2Δ/Δ	14.6	Δ	0.82	92.4	116	160	220	75
256T	20	15	1780	48.2/24.1	2Δ/Δ	19.3	Δ	0.84	93	145	160	220	75
284T	25	18.5	1775	58.4/29.2	2Δ/Δ	23.3	Δ	0.85	93.6	182.5	150	220	85
286T	30	22	1775	69.4/34.7	2Δ/Δ	27.8	Δ	0.85	93.6	217.5	150	220	85
324T	40	30	1780	93.1/46.5	2Δ/Δ	37.2	Δ	0.86	94.1	290	160	230	85
326T	50	37	1780	114/57.1	2Δ/Δ	45.7	Δ	0.86	94.5	362.5	160	240	85
364T	60	45	1785	138/69.1	2Δ/Δ	55.3	Δ	0.86	95	435	140	200	88
365T	75	55	1780	168/84.1	2Δ/Δ	67.3	Δ	0.86	95.4	542.5	150	220	88
405T	100	75	1790	227/113	2Δ/Δ	90.7	Δ	0.87	95.4	725	150	230	89
444T	125	90	1790	276/138	2Δ/Δ	110	Δ	0.86	95.4	907.5	130	220	90
445T	150	110	1790	336/168	2Δ/Δ	134	Δ	0.86	95.8	1085	130	220	92
447T	200	150	1790	456/228	2Δ/Δ	182	Δ	0.86	96.2	1450	120	220	92
449T	250	185	1790	566/283	2Δ/Δ	226	Δ	0.86	96.2	1825	120	200	107
449T	300	220	1790	680/340	2Δ/Δ	272	Δ	0.86	96.2	2200	120	200	110
586/7T	300	220	1790	680/340	2Δ/Δ	272	Δ	0.86	96.2	2200	120	200	110
586/7T	350	260	1790	792/396	2Δ/Δ	317	Δ	0.86	96.2	2550	120	200	110
586/7T	400	295	1790	906/453	2Δ/Δ	362	Δ	0.86	96.2	2900	120	200	110
586/7T	450	330	1790	1018/509	2Δ/Δ	407	Δ	0.86	96.2	3250	120	200	110
586/7T	500	370	1790	1132/566	2Δ/Δ	453	Δ	0.86	96.2	3625	120	200	113

技术数据 TECHNICAL DATA

机座号 Frame No.	额定功率 Rated Output		满载时 At Full Load						效率 Efficiency	堵转电流 Locked rotor current	转矩 Torque		噪声 Noise Level
			转速 Speed	230/460V		575V		功率因数 Power factor			堵转/额定 Locked / Rated	最大/额定 Breakdown / Rated	
	HP	kW	r/min	电流 Current A	接法 Connection method	电流 Current A	接法 Connection method	Cosφ	FL 100%	A(460V)	%	%	Lw dB(A)
145T	1	0.75	1160	3.4/1.7	2Y/Y	1.4	Y	0.65	82.5	15	170	265	64
182T	1.5	1.1	1175	4.8/2.4	2Y/Y	1.92	Y	0.66	87.5	20	165	250	67
184T	2	1.5	1175	6.4/3.2	2Y/Y	2.6	Y	0.67	88.5	25	160	240	67
213T	3	2.2	1185	8.82/4.41	2Y/Y	3.53	Y	0.7	89.5	32	155	230	67
215T	5	3.7	1180	14.4/7.21	2Y/Y	5.77	Y	0.72	89.5	46	155	230	67
254T	7.5	5.5	1185	20.8/10.4	2Δ/Δ	8.31	Δ	0.73	91	63.5	160	230	70
256T	10	7.5	1185	28.3/14.2	2Δ/Δ	11.3	Δ	0.73	91	81	160	220	70
284T	15	11	1185	37.6/18.8	2Δ/Δ	15.1	Δ	0.8	91.7	116	150	230	80
286T	20	15	1185	50.1/25.0	2Δ/Δ	20	Δ	0.82	91.7	145	140	220	80
324T	25	18.5	1190	67.5/33.7	2Δ/Δ	27	Δ	0.74	93	182.5	150	230	81
326T	30	22	1185	77.1/38.6	2Δ/Δ	30.8	Δ	0.77	93	217.5	140	210	81
364T	40	30	1190	101/50.7	2Δ/Δ	40.5	Δ	0.79	94.1	290	140	230	82
365T	50	37	1190	125/62.5	2Δ/Δ	50	Δ	0.79	94.1	362.5	145	230	83
404T	60	45	1190	141/70.3	2Δ/Δ	56.3	Δ	0.85	94.5	435	145	220	85
405T	75	55	1190	172/85.9	2Δ/Δ	68.8	Δ	0.85	94.5	542.5	145	220	88
444T	100	75	1190	242/121	2Δ/Δ	96.7	Δ	0.82	95	725	135	220	92
445T	125	90	1195	290/145	2Δ/Δ	116	Δ	0.82	95	907.5	135	220	92
447T	150	110	1195	352/176	2Δ/Δ	141	Δ	0.82	95.8	1085	140	220	92
449T	200	150	1195	468/234	2Δ/Δ	187	Δ	0.84	95.8	1450	120	210	94
449T	250	185	1195	582/291	2Δ/Δ	233	Δ	0.84	95.8	1825	120	200	105
449T	300	220	1195	698/349	2Δ/Δ	279	Δ	0.84	95.8	2200	120	200	105
586/7T	250	185	1195	582/291	2Δ/Δ	233	Δ	0.84	95.8	1825	120	200	105
586/7T	300	220	1195	698/349	2Δ/Δ	279	Δ	0.84	95.8	2200	120	200	105
586/7T	350	260	1195	814/407	2Δ/Δ	326	Δ	0.84	95.8	2550	120	200	105
586/7T	400	295	1195	930/465	2Δ/Δ	372	Δ	0.84	95.8	2900	120	200	105
586/7T	450	330	1195	1048/524	2Δ/Δ	419	Δ	0.84	95.8	3250	120	200	108
586/7T	500	370	1195	1164/582	2Δ/Δ	465	Δ	0.84	95.8	3625	120	200	108

安装及外形尺寸 MOUNTING AND OVERALL DIMENSIONS

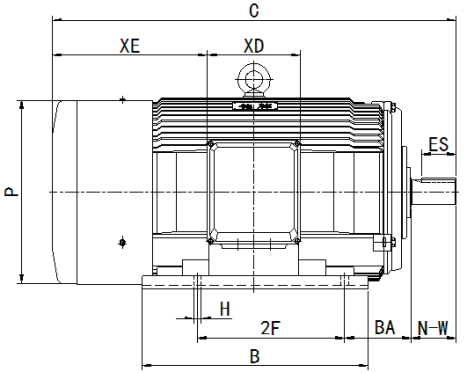

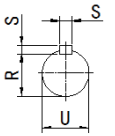

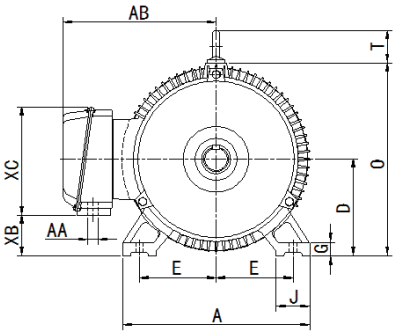

143T–215T

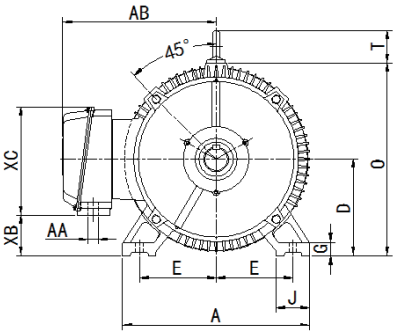

254T–587T

机座号	尺寸(英寸) Dimension (inch)																							
Frame No.	max A	max B	C	D	E	2F	G	H	J	N-W	O	P	R	S	T	U	min ES	AA NPT	AB	BA	XB	XC	XD	XE
143T	7	6	13.46	3.5	2.75	4	0.472	0.34	1.42	2.25	7.48	7.09	0.771	0.188	—	0.875	1.42	3/4	6.3	2.25	1.65	4.49	4.09	4.43
145T	7	6	14.77	3.5	2.75	5	0.472	0.34	1.42	2.25	7.48	7.09	0.771	0.188	—	0.875	1.42	3/4	6.3	2.25	1.65	4.49	4.09	5.04
182T	9	7.1	15.9	4.5	3.75	4.5	0.59	0.43	1.97	2.75	8.97	8.82	0.986	0.25	1.42	1.125	1.78	1	7.48	2.75	2.05	5	4.57	5.39
184T	9	7.1	17.91	4.5	3.75	5.5	0.59	0.43	1.97	2.75	8.97	8.82	0.986	0.25	1.42	1.125	1.78	1	7.48	2.75	2.05	5	4.57	6.37
213T	10.5	8.8	20.19	5.25	4.25	5.5	0.709	0.43	2.36	3.38	10.53	10.4	1.201	0.312	1.73	1.375	2.41	1	8.66	3.5	2.95	5	4.57	7.48
215T	10.5	10.3	21.69	5.25	4.25	7	0.709	0.43	2.36	3.38	10.53	10.4	1.201	0.312	1.73	1.375	2.41	1	8.66	3.5	2.95	5	4.57	8.22
254T	12.5	12.5	25.06	6.25	5	8.25	0.787	0.53	2.76	4	12.89	12.6	1.416	0.375	2.05	1.625	2.91	1-1/2	11.2	4.25	3	7.2	6.3	8.66
256T	12.5	14.3	27.83	6.25	5	10	0.787	0.53	2.76	4	12.89	12.6	1.416	0.375	2.05	1.625	2.91	1-1/2	11.2	4.25	3	7.2	6.3	10.04
284T	14	12.5	28	7	5.5	9.5	0.866	0.53	2.76	4.62	14.28	14.17	1.591	0.5	2.05	1.875	3.28	1-1/2	12	4.75	3.58	7.2	6.3	10.5
284TS	14	12.5	26.63	7	5.5	9.5	0.866	0.53	2.76	3.25	14.28	14.17	1.416	0.375	2.05	1.625	1.91	1-1/2	12	4.75	3.58	7.2	6.3	10.5
286T	14	14	29.5	7	5.5	11	0.866	0.53	2.76	4.62	14.28	14.17	1.591	0.5	2.05	1.875	3.28	1-1/2	12	4.75	3.58	7.2	6.3	11.25
286TS	14	14	28.13	7	5.5	11	0.866	0.53	2.76	3.25	14.28	14.17	1.416	0.375	2.05	1.625	1.91	1-1/2	12	4.75	3.58	7.2	6.3	11.25
324T	16	15.5	31.24	8	6.25	10.5	0.984	0.66	2.76	5.25	15.91	15.75	1.845	0.5	2.44	2.125	3.91	2	13.4	5.25	2.64	10.55	8.89	10.47
324TS	16	15.5	29.74	8	6.25	10.5	0.984	0.66	2.76	3.75	15.91	15.75	1.591	0.5	2.44	1.875	2.03	2	13.4	5.25	2.64	10.55	8.89	10.47
326T	16	16.5	32.8	8	6.25	12	0.984	0.66	2.76	5.25	15.91	15.75	1.845	0.5	2.44	2.125	3.91	2	13.4	5.25	2.64	10.55	8.89	11.26
326TS	16	16.5	31.3	8	6.25	12	0.984	0.66	2.76	3.75	15.91	15.75	1.591	0.5	2.44	1.875	2.03	2	13.4	5.25	2.64	10.55	8.89	11.26
364T	18	16.8	35.4	9	7	11.25	1.102	0.66	2.95	5.88	18.13	17.7	2.021	0.625	2.44	2.375	4.28	3	15.7	5.88	3.74	10.55	8.89	12
364TS	18	16.8	33.27	9	7	11.25	1.102	0.66	2.95	3.75	18.13	17.7	1.591	0.5	2.44	1.875	2.03	3	15.7	5.88	3.74	10.55	8.89	12
365T	18	18.4	37	9	7	12.25	1.102	0.66	2.95	5.88	18.13	17.7	2.021	0.625	2.44	2.375	4.28	3	15.7	5.88	3.74	10.55	8.89	12.8
365TS	18	18.4	34.87	9	7	12.25	1.102	0.66	2.95	3.75	18.13	17.7	1.591	0.5	2.44	1.875	2.03	3	15.7	5.88	3.74	10.55	8.89	12.8
404T	20	16.2	36.81	10	8	12.25	1.18	0.81	3.15	7.25	21.02	21.42	2.45	0.75	2.83	2.875	5.65	3	18.31	6.62	4.57	11.73	9.76	11.69
404TS	20	16.2	33.81	10	8	12.25	1.18	0.81	3.15	4.25	21.02	21.42	1.845	0.5	2.83	2.125	2.78	3	18.31	6.62	4.57	11.73	9.76	11.69
405T	20	17.8	38.35	10	8	13.75	1.18	0.81	3.15	7.25	21.02	21.42	2.45	0.75	2.83	2.875	5.65	3	18.31	6.62	4.57	11.73	9.76	12.48
405TS	20	17.8	35.35	10	8	13.75	1.18	0.81	3.15	4.25	21.02	21.42	1.845	0.5	2.83	2.125	2.78	3	18.31	6.62	4.57	11.73	9.76	12.48
444T	22	18.5	42.52	11	9	14.5	1.38	0.81	3.35	8.5	22.97	23.43	2.88	0.875	3.46	3.375	6.91	2×3	19.41	7.5	5.67	11.73	11.34	13.39
444TS	22	18.5	38.94	11	9	14.5	1.38	0.81	3.35	4.75	22.97	23.43	2.021	0.625	3.46	2.375	3.03	2×3	19.41	7.5	5.67	11.73	11.34	13.39
445T	22	20.5	44.5	11	9	16.5	1.38	0.81	3.35	8.5	22.97	23.43	2.88	0.875	3.46	3.375	6.91	2×3	19.41	7.5	5.67	11.73	11.34	14.37
445TS	22	20.5	40.71	11	9	16.5	1.38	0.81	3.35	4.75	22.97	23.43	2.021	0.625	3.46	2.375	3.03	2×3	19.41	7.5	5.67	11.73	11.34	14.37
447T	22	24	48.03	11	9	20	1.38	0.81	3.35	8.5	22.97	23.43	2.88	0.875	3.46	3.375	6.91	2×3	19.41	7.5	5.67	11.73	11.34	18.9
447TS	22	24	44.25	11	9	20	1.38	0.81	3.35	4.75	22.97	23.43	2.021	0.625	3.46	2.375	3.03	2×3	19.41	7.5	5.67	11.73	11.34	18.9
449T	22	31	55.51	11	9	25	1.575	0.81	3.35	8.5	23	24	2.88	0.875	4.25	3.375	7.01	2×3	19.07	7.5	4.74	11.8	11.34	20
449TS	22	31	51.8	11	9	25	1.575	0.81	3.35	4.72	23	24	2.021	0.625	4.25	2.375	3.15	2×3	19.07	7.5	4.74	11.8	11.34	20

安装及外形尺寸 MOUNTING AND OVERALL DIMENSIONS

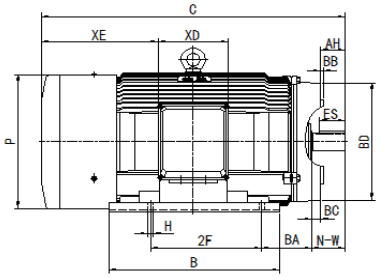

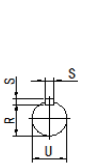

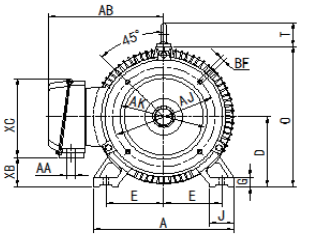

143TC–145TC

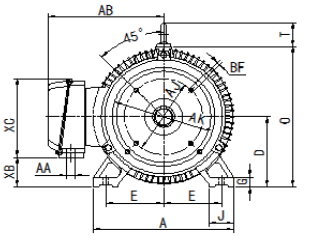

182TC–215TC

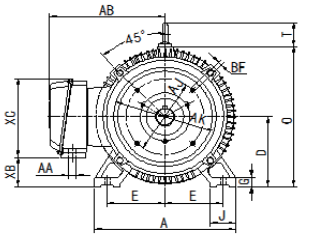

254TC–326TC/TSC

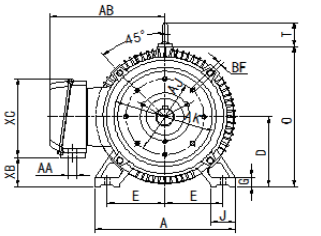

364TC/TSC–449TC/TSC

机座号	尺寸(英寸) Dimension (inch)																															
Frame No.	max A	max B	C	D	E	2F	G	H	J	N-W	O	P	R	S	T	U	min ES	AA NPT	AB	AH	AJ	AK	BA	min BB	BC	max BD	BE	BF	XB	XC	XD	XE
143TD	7	6	13.46	3.5	2.75	4	0.472	0.34	1.42	2.25	7.48	7.09	0.771	0.188	—	0.875	1.42	3/4	6.3	2.25	10	9	2.25	0.25	0	11	0.5	0.53	1.65	4.49	4.09	4.43
145TD	7	6	14.77	3.5	2.75	5	0.472	0.34	1.42	2.25	7.48	7.09	0.771	0.188	—	0.875	1.42	3/4	6.3	2.25	10	9	2.25	0.25	0	11	0.5	0.53	1.65	4.49	4.09	5.04
182TD	9	7.1	15.9	4.5	3.75	4.5	0.59	0.43	1.97	2.75	8.97	8.82	0.986	0.25	1.42	1.125	1.78	1	7.48	2.75	10	9	2.75	0.25	0	11	0.5	0.53	2.05	5	4.57	5.39
184TD	9	7.1	17.91	4.5	3.75	5.5	0.59	0.43	1.97	2.75	8.97	8.82	0.986	0.25	1.42	1.125	1.78	1	7.48	2.75	10	9	2.75	0.25	0	11	0.5	0.53	2.05	5	4.57	6.37
213TD	10.5	8.8	20.19	5.25	4.25	5.5	0.709	0.43	2.36	3.38	10.53	10.4	1.201	0.312	1.73	1.375	2.41	1	8.66	3.38	10	9	3.5	0.25	0	11	0.5	0.53	2.95	5	4.57	7.48
215TD	10.5	10.3	21.69	5.25	4.25	7	0.709	0.43	2.36	3.38	10.53	10.4	1.201	0.312	1.73	1.375	2.41	1	8.66	3.38	10	9	3.5	0.25	0	11	0.5	0.53	2.95	5	4.57	8.22
254TD	12.5	12.5	25.06	6.25	5	8.25	0.787	0.53	2.76	4	12.89	12.6	1.416	0.375	2.05	1.625	2.91	1-1/2	11.2	4	12.5	11	4.25	0.25	0	14	0.75	0.81	3	7.2	6.3	8.66
256TD	12.5	14.3	27.83	6.25	5	10	0.787	0.53	2.76	4	12.89	12.6	1.416	0.375	2.05	1.625	2.91	1-1/2	11.2	4	12.5	11	4.25	0.25	0	14	0.75	0.81	3	7.2	6.3	10
284TD	14	12.5	28	7	5.5	9.5	0.866	0.53	2.76	4.62	14.28	14.17	1.591	0.5	2.05	1.875	3.28	1-1/2	12	4.62	12.5	11	4.75	0.25	0	14	0.75	0.81	3.58	7.2	6.3	10.5
284TSD	14	12.5	26.63	7	5.5	9.5	0.866	0.53	2.76	3.25	14.28	14.17	1.416	0.375	2.05	1.625	1.91	1-1/2	12	3.25	12.5	11	4.75	0.25	0	14	0.75	0.81	3.58	7.2	6.3	10.5
286TD	14	14	29.5	7	5.5	11	0.866	0.53	2.76	4.62	14.28	14.17	1.591	0.5	2.05	1.875	3.28	1-1/2	12	4.62	12.5	11	4.75	0.25	0	14	0.75	0.81	3.58	7.2	6.3	11.3
286TSD	14	14	28.13	7	5.5	11	0.866	0.53	2.76	3.25	14.28	14.17	1.416	0.375	2.05	1.625	1.91	1-1/2	12	3.25	12.5	11	4.75	0.25	0	14	0.75	0.81	3.58	7.2	6.3	11.3
324TD	16	15.5	31.24	8	6.25	10.5	0.984	0.66	2.76	5.25	15.91	15.75	1.845	0.5	2.44	2.125	3.91	2	13.4	5.25	16	14	5.25	0.25	0	18	0.75	0.81	2.64	10.55	8.98	10.5
324TSD	16	15.5	29.74	8	6.25	10.5	0.984	0.66	2.76	3.75	15.91	15.75	1.591	0.5	2.44	1.875	2.03	2	13.4	3.75	16	14	5.25	0.25	0	18	0.75	0.81	2.64	10.55	8.98	10.5
326TD	16	16.5	32.8	8	6.25	12	0.984	0.66	2.76	5.25	15.91	15.75	1.845	0.5	2.44	2.125	3.91	2	13.4	5.25	16	14	5.25	0.25	0	18	0.75	0.81	2.64	10.55	8.98	11.3
326TSD	16	16.5	31.3	8	6.25	12	0.984	0.66	2.76	3.75	15.91	15.75	1.591	0.5	2.44	1.875	2.03	2	13.4	3.75	16	14	5.25	0.25	0	18	0.75	0.81	2.64	10.55	8.98	11.3
364TD	18	16.8	35.4	9	7	11.25	1.102	0.66	2.95	5.88	18.13	17.7	2.021	0.625	2.44	2.375	4.28	3	15.7	5.88	16	14	5.88	0.25	0	18	0.75	0.81	3.74	10.55	8.98	12
364TSD	18	16.8	33.27	9	7	11.25	1.102	0.66	2.95	3.75	18.13	17.7	1.591	0.5	2.44	1.875	2.03	3	15.7	3.75	16	14	5.88	0.25	0	18	0.75	0.81	3.74	10.55	8.98	12
365TD	18	18.4	37	9	7	12.25	1.102	0.66	2.95	5.88	18.13	17.7	2.021	0.625	2.44	2.375	4.28	3	15.7	5.88	16	14	5.88	0.25	0	18	0.75	0.81	3.74	10.55	8.89	12.8
365TSD	18	18.4	34.87	9	7	12.25	1.102	0.66	2.95	3.75	18.13	17.7	1.591	0.5	2.44	1.875	2.03	3	15.7	3.75	16	14	5.88	0.25	0	18	0.75	0.81	3.74	10.55	8.98	12.8
404TD	20	16.2	36.81	10	8	12.25	1.18	0.81	3.15	7.25	21.02	21.42	2.45	0.75	2.83	2.875	5.65	3	18.31	7.25	20	18	6.62	0.25	0	22	1	0.81	4.57	11.73	9.76	11.7
404TSD	20	16.2	33.81	10	8	12.25	1.18	0.81	3.15	4.25	21.02	21.42	1.845	0.5	2.83	2.125	2.78	3	18.31	4.25	20	18	6.62	0.25	0	22	1	0.81	4.57	11.73	9.76	11.7
405TD	20	17.8	38.35	10	8	13.75	1.18	0.81	3.15	7.25	21.02	21.42	2.45	0.75	2.83	2.875	5.65	3	18.31	7.25	20	18	6.62	0.25	0	22	1	0.81	4.57	11.73	9.76	12.5
405TSD	20	17.8	35.35	10	8	13.75	1.18	0.81	3.15	4.25	21.02	21.42	1.845	0.5	2.83	2.125	2.78	3	18.31	4.25	20	18	6.62	0.25	0	22	1	0.81	4.57	11.73	9.76	12.5
444TD	22	18.5	42.52	11	9	14.5	1.38	0.81	3.35	8.5	22.97	23.43	2.88	0.875	3.46	3.375	6.91	2×3	19.41	8.5	20	18	7.5	0.25	0	22	1	0.81	5.67	11.73	11.34	13.4
444TSD	22	18.5	38.94	11	9	14.5	1.38	0.81	3.35	4.75	22.97	23.43	2.021	0.625	3.46	2.375	3.03	2×3	19.41	4.75	20	18	7.5	0.25	0	22	1	0.81	5.67	11.73	11.34	13.4
445TD	22	20.5	44.5	11	9	16.5	1.38	0.81	3.35	8.5	22.97	23.43	2.88	0.875	3.46	3.375	6.91	2×3	19.41	8.5	20	18	7.5	0.25	0	22	1	0.81	5.67	11.73	11.34	14.4
445TSD	22	20.5	40.71	11	9	16.5	1.38	0.81	3.35	4.75	22.97	23.43	2.021	0.625	3.46	2.375	3.03	2×3	19.41	4.75	20	18	7.5	0.25	0	22	1	0.81	5.67	11.73	11.34	14.4
447TD	22	24	48.03	11	9	20	1.38	0.81	3.35	8.5	22.97	23.43	2.88	0.875	3.46	3.375	6.91	2×3	19.41	8.5	20	18	7.5	0.25	0	22	1	0.81	5.67	11.73	11.34	18.9
447TSD	22	24	44.25	11	9	20	1.38	0.81	3.35	4.75	22.97	23.43	2.021	0.625	3.46	2.375	3.03	2×3	19.41	4.75	20	18	7.5	0.25	0	22	1	0.81	5.67	11.73	11.34	18.9
449TD	22	31	55.51	11	9	25	1.575	0.81	3.35	8.5	23	24	2.88	0.875	4.25	3.375	7.01	2×3	19.07	8.5	20	18	7.5	0.256	0	21.5	1	0.81	4.74	11.8	11.34	20
449TSD	22	31	51.8	11	9	25	1.575	0.81	3.35	4.72	23	24	2.021	0.625	4.25	2.375	3.15	2×3	19.07	4.72	20	18	7.5	0.256	0	21.5	1	0.81	4.74	11.8	11.34	20

安装及外形尺寸 MOUNTING AND OVERALL DIMENSIONS

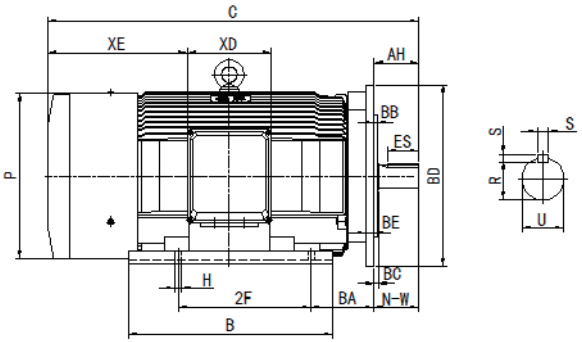

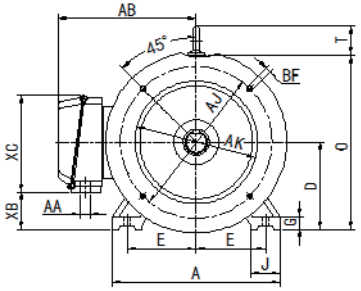

143TD-215TD

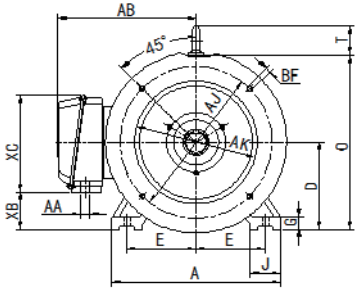

254TD-365TD/TSD

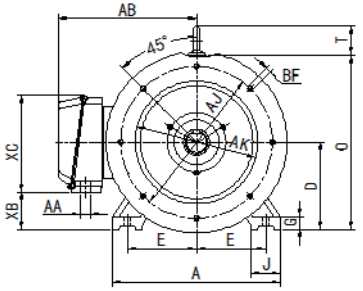

404TD/TSD-449TD/TSD

机座号 Frame No.	尺寸(英寸) Dimension (inch) max A	max B	C	D	E	2F	G	H	J	N-W	O	P	R	S	T	U	min ES	AA NPT	AB	AH	AJ	AK	BA	min BB	BC	max BD	BE	BF	XB	XC	XD	XE
143TD	7	6	13.46	3.5	2.75	4	0.472	0.34	1.42	2.25	7.48	7.09	0.771	0.188	—	0.875	1.42	3/4	6.3	2.25	10	9	2.25	0.25	0	11	0.5	0.53	1.65	4.49	4.09	4.43
145TD	7	6	14.77	3.5	2.75	5	0.472	0.34	1.42	2.25	7.48	7.09	0.771	0.188	—	0.875	1.42	3/4	6.3	2.25	10	9	2.25	0.25	0	11	0.5	0.53	1.65	4.49	4.09	5.04
182TD	9	7.1	15.9	4.5	3.75	4.5	0.59	0.43	1.97	2.75	8.97	8.82	0.986	0.25	1.42	1.125	1.78	1	7.48	2.75	10	9	2.75	0.25	0	11	0.5	0.53	2.05	5	4.57	5.39
184TD	9	7.1	17.91	4.5	3.75	5.5	0.59	0.43	1.97	2.75	8.97	8.82	0.986	0.25	1.42	1.125	1.78	1	7.48	2.75	10	9	2.75	0.25	0	11	0.5	0.53	2.05	5	4.57	6.37
213TD	10.5	8.8	20.19	5.25	4.25	5.5	0.709	0.43	2.36	3.38	10.53	10.4	1.201	0.312	1.73	1.375	2.41	1	8.66	3.38	10	9	3.5	0.25	0	11	0.5	0.53	2.95	5	4.57	7.48
215TD	10.5	10.3	21.69	5.25	4.25	7	0.709	0.43	2.36	3.38	10.53	10.4	1.201	0.312	1.73	1.375	2.41	1	8.66	3.38	10	9	3.5	0.25	0	11	0.5	0.53	2.95	5	4.57	8.22
254TD	12.5	12.5	25.06	6.25	5	8.25	0.787	0.53	2.76	4	12.89	12.6	1.416	0.375	2.05	1.625	2.91	1-1/2	11.2	4	12.5	11	4.25	0.25	0	14	0.75	0.81	3	7.2	6.3	8.66
256TD	12.5	14.3	27.83	6.25	5	10	0.787	0.53	2.76	4	12.89	12.6	1.416	0.375	2.05	1.625	2.91	1-1/2	11.2	4	12.5	11	4.25	0.25	0	14	0.75	0.81	3	7.2	6.3	10
284TD	14	12.5	28	7	5.5	9.5	0.866	0.53	2.76	4.62	14.28	14.17	1.591	0.5	2.05	1.875	3.28	1-1/2	12	4.62	12.5	11	4.75	0.25	0	14	0.75	0.81	3.58	7.2	6.3	10.5
284TSD	14	12.5	26.63	7	5.5	9.5	0.866	0.53	2.76	3.25	14.28	14.17	1.416	0.375	2.05	1.625	1.91	1-1/2	12	3.25	12.5	11	4.75	0.25	0	14	0.75	0.81	3.58	7.2	6.3	10.5
286TD	14	14	29.5	7	5.5	11	0.866	0.53	2.76	4.62	14.28	14.17	1.591	0.5	2.05	1.875	3.28	1-1/2	12	4.62	12.5	11	4.75	0.25	0	14	0.75	0.81	3.58	7.2	6.3	11.3
286TSD	14	14	28.13	7	5.5	11	0.866	0.53	2.76	3.25	14.28	14.17	1.416	0.375	2.05	1.625	1.91	1-1/2	12	3.25	12.5	11	4.75	0.25	0	14	0.75	0.81	3.58	7.2	6.3	11.3
324TD	16	15.5	31.24	8	6.25	10.5	0.984	0.66	2.76	5.25	15.91	15.75	1.845	0.5	2.44	2.125	3.91	2	13.4	5.25	16	14	5.25	0.25	0	18	0.75	0.81	2.64	10.55	8.98	10.5
324TSD	16	15.5	29.74	8	6.25	10.5	0.984	0.66	2.76	3.75	15.91	15.75	1.591	0.5	2.44	1.875	2.03	2	13.4	3.75	16	14	5.25	0.25	0	18	0.75	0.81	2.64	10.55	8.98	10.5
326TD	16	16.5	32.8	8	6.25	12	0.984	0.66	2.76	5.25	15.91	15.75	1.845	0.5	2.44	2.125	3.91	2	13.4	5.25	16	14	5.25	0.25	0	18	0.75	0.81	2.64	10.55	8.98	11.3
326TSD	16	16.5	31.3	8	6.25	12	0.984	0.66	2.76	3.75	15.91	15.75	1.591	0.5	2.44	1.875	2.03	2	13.4	3.75	16	14	5.25	0.25	0	18	0.75	0.81	2.64	10.55	8.98	11.3
364TD	18	16.8	35.4	9	7	11.25	1.102	0.66	2.95	5.88	18.13	17.7	2.021	0.625	2.44	2.375	4.28	3	15.7	5.88	16	14	5.88	0.25	0	18	0.75	0.81	3.74	10.55	8.98	12
364TSD	18	16.8	33.27	9	7	11.25	1.102	0.66	2.95	3.75	18.13	17.7	1.591	0.5	2.44	1.875	2.03	3	15.7	3.75	16	14	5.88	0.25	0	18	0.75	0.81	3.74	10.55	8.98	12
365TD	18	18.4	37	9	7	12.25	1.102	0.66	2.95	5.88	18.13	17.7	2.021	0.625	2.44	2.375	4.28	3	15.7	5.88	16	14	5.88	0.25	0	18	0.75	0.81	3.74	10.55	8.89	12.8
365TSD	18	18.4	34.87	9	7	12.25	1.102	0.66	2.95	3.75	18.13	17.7	1.591	0.5	2.44	1.875	2.03	3	15.7	3.75	16	14	5.88	0.25	0	18	0.75	0.81	3.74	10.55	8.98	12.8
404TD	20	16.2	36.81	10	8	12.25	1.18	0.81	3.15	7.25	21.02	21.42	2.45	0.75	2.83	2.875	5.65	3	18.31	7.25	20	18	6.62	0.25	0	22	1	0.81	4.57	11.73	9.76	11.7
404TSD	20	16.2	33.81	10	8	12.25	1.18	0.81	3.15	4.25	21.02	21.42	1.845	0.5	2.83	2.125	2.78	3	18.31	4.25	20	18	6.62	0.25	0	22	1	0.81	4.57	11.73	9.76	11.7
405TD	20	17.8	38.35	10	8	13.75	1.18	0.81	3.15	7.25	21.02	21.42	2.45	0.75	2.83	2.875	5.65	3	18.31	7.25	20	18	6.62	0.25	0	22	1	0.81	4.57	11.73	9.76	12.5
405TSD	20	17.8	35.35	10	8	13.75	1.18	0.81	3.15	4.25	21.02	21.42	1.845	0.5	2.83	2.125	2.78	3	18.31	4.25	20	18	6.62	0.25	0	22	1	0.81	4.57	11.73	9.76	12.5
444TD	22	18.5	42.52	11	9	14.5	1.38	0.81	3.35	8.5	22.97	23.43	2.88	0.875	3.46	3.375	6.91	2×3	19.41	8.5	20	18	7.5	0.25	0	22	1	0.81	5.67	11.73	11.34	13.4
444TSD	22	18.5	38.94	11	9	14.5	1.38	0.81	3.35	4.75	22.97	23.43	2.021	0.625	3.46	2.375	3.03	2×3	19.41	4.75	20	18	7.5	0.25	0	22	1	0.81	5.67	11.73	11.34	13.4
445TD	22	20.5	44.5	11	9	16.5	1.38	0.81	3.35	8.5	22.97	23.43	2.88	0.875	3.46	3.375	6.91	2×3	19.41	8.5	20	18	7.5	0.25	0	22	1	0.81	5.67	11.73	11.34	14.4
445TSD	22	20.5	40.71	11	9	16.5	1.38	0.81	3.35	4.75	22.97	23.43	2.021	0.625	3.46	2.375	3.03	2×3	19.41	4.75	20	18	7.5	0.25	0	22	1	0.81	5.67	11.73	11.34	14.4
447TD	22	24	48.03	11	9	20	1.38	0.81	3.35	8.5	22.97	23.43	2.88	0.875	3.46	3.375	6.91	2×3	19.41	8.5	20	18	7.5	0.25	0	22	1	0.81	5.67	11.73	11.34	18.9
447TSD	22	24	44.25	11	9	20	1.38	0.81	3.35	4.75	22.97	23.43	2.021	0.625	3.46	2.375	3.03	2×3	19.41	4.75	20	18	7.5	0.25	0	22	1	0.81	5.67	11.73	11.34	18.9
449TD	22	31	55.51	11	9	25	1.575	0.81	3.35	8.5	23	24	2.88	0.875	4.25	3.375	7.01	2×3	19.07	8.5	20	18	7.5	0.256	0	21.5	1	0.81	4.74	11.8	11.34	20
449TSD	22	31	51.8	11	9	25	1.575	0.81	3.35	4.72	23	24	2.021	0.625	4.25	2.375	3.15	2×3	19.07	4.72	20	18	7.5	0.256	0	21.5	1	0.81	4.74	11.8	11.34	20

安装及外形尺寸 MOUNTING AND OVERALL DIMENSIONS

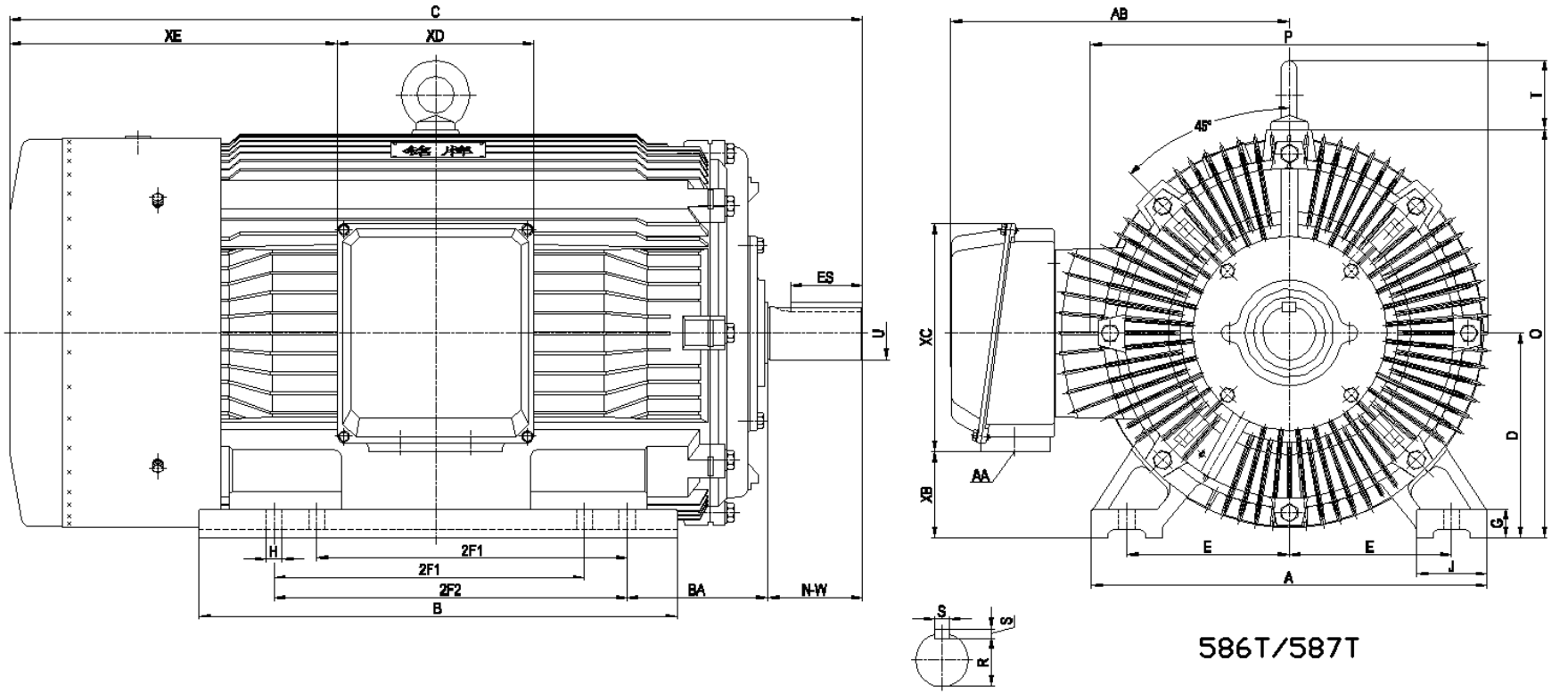

机座号	尺寸(英寸) Dimension (inch)																								
Frame No.	max A	max B	C	D	E	2F1	2F2	G	H	J	N-W	O	P	R	S	T	U	min ES	AA NPT	AB	BA	XB	XC	XD	XE
586T/587T	28	33.85	65.6	14.5	11.5	22	25	2.05	1.19	5	11.63	28.87	28.15	3.309	1	4.99	3.875	10	2x3	23.9	10	5.3	16.1	13.9	23


Italy
Shanghai
U.S.A
C.A.N